Fast Trak™

Pre-fabricated, trapeze bracket solution offering speed, flexibility and efficient use of space, for the installation of electrical containment, pipework, ductwork and other mechanical services in restricted places.

FEATURES / BENEFITS

- **Quick** – up to six times faster to install than traditional suspension systems
- **Safe** – pre-fabricated system which removes the need to cut threaded rod or channel on site
- **Tool free** – bracket can be moved up and down the tracks to accommodate changes in position during installation
- **Secure** – safety locks ensure security once brackets & tracks are in place
- **Zero waste** – tracks bend neatly under bracket
- **Space saver** – can be multi-tiered to accommodate additional services
- **Easy measurement** – indicators at each end of the bracket can be used as a measurement guide when marking fixing points in the soffit
- **Neat & tidy** – system can be 'stacked' on-site to reduce storage

INSTALLATION & ADJUSTMENT

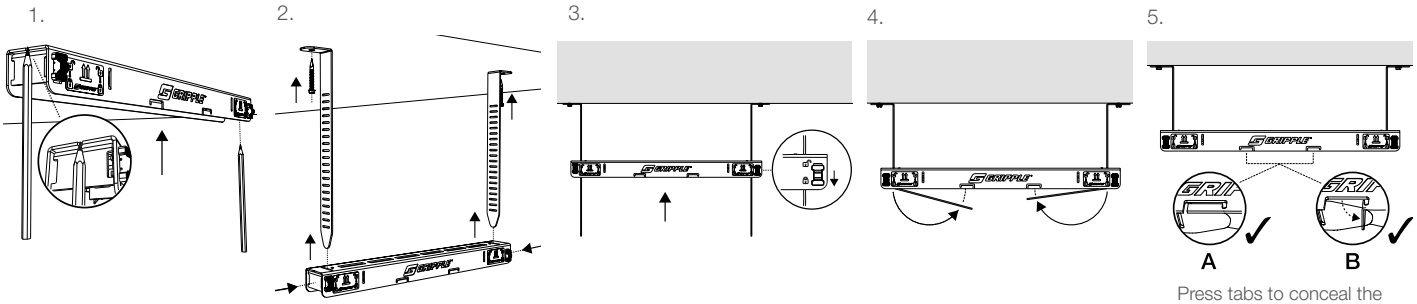

Press tabs to conceal the tracks for a neater finish.

Internal applications only. Do not adjust under load. No dynamic loading.

SPECIFICATION

Bracket

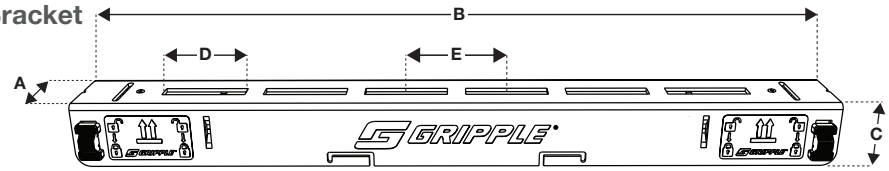

Bracket	A (mm)	B (mm)	C (mm)	D (mm)	E (mm)	Distance Between Traks	Max Single Point Load	Max Uniform Load (UDL)
FTB250	44	309	35	45	55	250 mm	90 kg	180 kg (3:1)
FTB350	44	409	35	45	55	350 mm	90 kg	180 kg (3:1)
FTB450	44	509	35	45	55	450 mm	90 kg	180 kg (3:1)
FTB600	44	659	35	45	55	600 mm	90 kg	180 kg (3:1)
FTB750	44	809	35	45	55	750 mm	90 kg	180 kg (3:1)
FTB900	44	959	35	45	55	900 mm	90 kg	180 kg (3:1)

Track

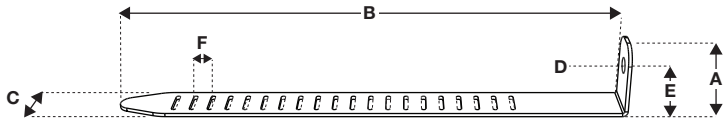

Track	A (mm)	B (mm)	C (mm)	D (Ø)	E (mm)	F (mm)	Safe Working Load (per track)
FTT 285	40	285	28	10.1	24	10	90 kg (5:1)
FTT 535	40	535	28	10.1	24	10	90 kg (5:1)

MOUNTING METHODS

- Shot Fire
- Drop-in Anchor
- Concrete Screw
- Wood Screw
- Wedge Anchor

Please check load ratings of fixings as these may differ to the Fast Trak system SWL.

For more options on suspension methods please contact us or visit **www.gripple.com**

SUBMITTAL INFORMATION

Safe Working Load:
See table in specification

Material:
BS EN 10346:2009 DX51D (Mild Steel)
Button – Polypropylene, Impact Copolymer

Approvals:
Lloyds certified
Load tested by Element
Fire tested by CERIB
TUV tested
APAVE tested

www.gripple.com

Gripple's policy is one of continuous development and innovation.
We therefore reserve the right to alter specifications, etc. without notice.

Gripple Ltd | The Old West Gun Works | Savile Street East | Sheffield S4 7UQ
Tel 0800 018 4264 Fax 0114 275 1155 Email info@gripple.com